KNN
Heavy-duty contactors

Types

KNN80	three pole, 80 A
KNN95	three pole, 95 A
KNN110	three pole, 110 A
KNN150	three pole, 150 A
KNN175	three pole, 175 A
KNN210	three pole, 210 A
KNN260	three pole, 260 A
KNN315	three pole, 315 A
KNN450	three pole, 450 A
KNN550	three pole, 550 A
KNN700	three pole, 700 A
KNN860	three pole, 860 A

Auxiliary switches		For use with
NDN2-22	2 NO / 2 NC	KNN80 - KNN315
NDN2-31	3 NO / 1 NC	KNN80 - KNN315
NDN2-40	4 NO / 0 NC	KNN80 - KNN315
NPN1-11	1 NO / 1 NC	KNN80 - KNN315
NDN3-22	2 NO / 2 NC	KNN450 - KNN860

Applications

Heavy-duty contactors are designed with standard dimensions for easy integration and offer a wide range of top and side auxiliary contact blocks. They feature a horizontal mechanical interlock, allowing different contactor sizes to be interlocked up to 135A. With a supply voltage range from 12V to 690V AC, DC, or AC/DC, they ensure reliable performance in demanding applications. Ideal for particularly heavy-duty use, these contactors provide durability and flexibility for industrial environments.

Technical data

Type	Symbol	Unit	KNN80	KNN95	KNN110	KNN150	KNN175
GENERAL							
Standards			IEC/EN60947-4-1, UL508				
Coil			AC	AC	AC / DC	AC / DC	AC / DC
Width		mm	79			110	
Dimensions (H x W x D)		mm	137 × 79 × 130		162 × 79 × 130	170 × 110 × 162	
MECHANICAL DATA							
Number of poles			3				
Degree of protection			IP20 front			IP00-IP20 (Front IP20 with optional shrouds)	
Ambient temperature							
open		°C	-25 ... +70				
close			-25 ... +70				
Storage temperature		°C	-40 ... +80				
Maximum operating frequency with no load		op.c./h	3000			1200	
Mechanical endurance		op.c.	10.000.000				
Weight		kg	1.8		2.2	4	
ELECTRICAL DATA POWER CIRCUIT							
Main pole resistance		mΩ	1			0.5	0.35
Rated short time current t. amb. = 40 °C							
1 s		A	900	1000	1200	1500	1750
4 s		A	800	900	1200	1500	1750
10 s		A	640	760	920	1200	1400
15 s		A	500	560	800	1050	1250
Maximum back-up fuse for short-circuit protection							
gG coordination type 1 (U_e=440 V)	P_e	kW	160	160	200	250	315
gG coordination type 2 (U_e=440 V)	P_e	kW	125	125	160	200	250
aM coordination type 2 (use associated with an overload relay)	P_e	kW	100	125	125	160	200
Rated insulation voltage	U_i	V	1000				
Razed impulse withstand voltage	U_{imp}	kV	8				
Rated operational voltage	U_e	V	1000				
Rated frequency	f	Hz	50 / 60				
Thermal current	I_{th}	A	125	125	135	230	250
Rated operational current for							
AC-1 U_e=690V t.amb.=40°C		A	125	125	135	230	250
AC-3 U_e=440V t.amb.=55°C		A	80	95	110	150	175
Operational power for AC-1 three-phase 400 V	P_e	kW	86	86	94	159	173
Maximum operating frequency for AC-1		op. c./h	500				
Electrical endurance for AC-1		op. c.	20.000				
Rated operational current for AC-3 (at 400 V)	I_e	A	80	95	110	150	175
Operational power for AC-3							
three-phase 230 V	P_e	kW	22	25	30	40	50
three-phase 400 V	P_e	kW	37	45	55	75	90
three-phase 440 V	P_e	kW	45	51	63	85	100
three-phase 500 V	P_e	kW	45	51	55	90	110
three-phase 690 V	P_e	kW	45	51	55	110	132
three-phase 1000 V	P_e	kW	25	30	37	75	90
Maximum operating frequency for AC-3		op. c./h	140	100	70	80	60
Electrical endurance for AC-3		op. c.	800.000				
Rated operational current for AC-4 (at 400 V)	I_e	A	35	40	45	55	63
Operational power for AC-4 three-phase 400 V	P_e	kW	17	18.5	22	25	30
Electrical endurance for AC-4		op. c.	20.000				
Rated motor power according to standards UL and CSA							
single-phase 115 V	P_e	HP	5	7.5	10	15	15
single-phase 230 V	P_e	HP	15	15	20	25	30
three-phase 200 V	P_e	HP	20	25	30	40	50
three-phase 230 V	P_e	HP	25	30	40	50	60
three-phase 460 V	P_e	HP	50	60	75	100	125
three-phase 575 V	P_e	HP	60	75	100	125	150

Technical data

Type	Symbol	Unit	KNN80	KNN95	KNN110	KNN150	KNN175
Maximum operating frequency for motors according to UL and CSA		op. c./h	140	100	70	80	60
Electrical endurance for motors according to UL and CSA		op. c.			800.000		
Maximum operating frequency for general use according to UL and CSA		op. c./h	140	100	70	80	60
Electrical endurance for general use according to UL and CSA		op. c.			800.000		
Rated operational current for DC-1 (L/R ≤ 1 ms)							
1 pole... 24 V DC / 75 V DC / 125 V DC / 220 V DC / 300 V DC	I_e	A	80/63/ -/-/-	90/80/ -/-/-	100/90/ -/-/-	160/125/ 125/-/-	200/160/ 125/-/-
2 poles in series ... 24 V DC / 75 V DC / 125 V DC / 220 V DC / 300 V DC	I_e	A	90/80/ 80/-/-	100/90/ 90/-/-	110/100/ 100/-/-	160/160/ 125/125/-	200/200/ 160/160/-
3 poles in series ... 24 V DC / 75 V DC / 125 V DC / 20 V DC / 300 V DC	I_e	A	90/90/ 90/-/-	100/100/ 100/90/-	110/110/ 110/100/-	160/160/ 160/160/125	200/200/ 200/200/160
Connection size							
Cables	S	mm^2	1×4 ... 35 + 1×4 ... 50			2×16 ... 120 with MR3	
Bars	S	mm	/				2x(20×5)
Tightening torque		Nm	8			17	
ELECTRICAL DATA CONTROL CIRCUIT							
Range of control voltage for switch-on	U_c	%	85 - 110 (AC / DC)				
Range of control voltage for drop-out	U_c	%	20 - 75 (AC) / 10 - 60 (DC)				
Standard AC control voltages	U_c	V	12, 24, 240, 380-400, 690		24, 48, 110-120, 220-240, 380-415, 440-480, 600		
Standard DC control voltages	U_c	V	12, 24, 48, 110, 220, 250		24, 48, 110, 220, 250		
Frequency of AC control voltage	f	Hz	50 / 60				
Control mode			Remote control with U_c				
AC coil consumption							
pick-up		VA / W	250			350	
operation		VA / W	18 / 6.3		24-125V: 4 220-600V: 19	5	
DC coil consumption							
pick-up		W	230			350	
operation		W	4			5	
Operating time at AC rated voltage							
pick-up		ms	12 ... 30		15 ... 50	30 ... 60	
drop-out		ms	6 ... 15			30 ... 80	

Technical data

Type	Symbol	Unit	KNN210	KNN260	KNN315	KNN450	KNN550
GENERAL							
Standards					IEC/EN60947-4-1, UL508		
Coil					AC / DC		
Width		mm		145		220	
Dimensions (H x W x D)		mm		200 × 145 × 208		250 × 220 x 225	258 × 220 x 225
MECHANICAL DATA							
Number of poles					3		
Degree of protection					IP00-IP20 (Front IP20 with optional shrouds)		
Ambient temperature							
open		°C			-25 ... +70		
close					-25 ... +70		
Storage temperature		°C			-40 ... +80		
Maximum operating frequency with no load		op.c./h			1200		
Mechanical endurance		op.c.		8.000.000		/	
Weight		kg		7.5		13	13.5
ELECTRICAL DATA POWER CIRCUIT							
Main pole resistance		mΩ		0.15		0.13	0.11
Rated short time current t. amb. = 40 °C							
1 s			2100	2600	3150	4500	5500
4 s		A	2100	2600	3150	4500	5500
10 s			1800	2200	2600	3600	4400
15 s			1600	2000	2250	3000	3800
Maximum back-up fuse for short-circuit protection							
gG coordination type 1 (U_e=440 V)			400	500	500	630	630
gG coordination type 2 (U_e=440 V)	P_e	kW	315	400	400	500	560
aM coordination type 2 (use associated with an overload relay)			250	315	315	-	-
Rated insulation voltage	U_i	V			1000		
Razed impulse withstand voltage	U_{imp}	kV			8		
Rated operational voltage	U_e	V			1000		
Rated frequency	f	Hz			50 / 60		
Thermal current	I_{th}	A	350	450	500	700	800
Rated operational current for							
AC-1 U_e=690V t.amb.=40°C		A	350	450	500	700	800
AC-3 U_e=440V t.amb.=55°C		A	210	260	315	450	550
Operational power for AC-1 three-phase 400 V	P_e	kW	242	311	346	485	554
Maximum operating frequency for AC-1		op. c./h			500		
Electrical endurance for AC-1		op. c.					
Rated operational current for AC-3 (at 400 V)	I_e	A	210	260	315	450	550
Operational power for AC-3							
three-phase 230 V			60	75	90	132	175
three-phase 400 V			110	132	160	250	315
three-phase 440 V	P_e	kW	125	150	190	270	335
three-phase 500 V			132	160	210	300	375
three-phase 690 V			132	160	210	375	500
three-phase 1000 V			110	132	160	280	355
Maximum operating frequency for AC-3		op. c./h	140	90	60	55	55
Electrical endurance for AC-3		op. c.		800.000		600.000	
Rated operational current for AC-4 (at 400 V)	I_e	A	85	100	120	150	180
Operational power for AC-4 three-phase 400 V	P_e	kW	45	55	63	75	90
Electrical endurance for AC-4		op. c.	20.000	10.000		6.000	
Rated motor power according to UL and CSA							
single-phase 115 V			20	25	25	-	-
single-phase 230 V			40	50	50	-	-
three-phase 200 V	P_e	HP	60	75	100	125	150
three-phase 230 V			75	100	125	125	150
three-phase 460 V			150	200	250	250	350
three-phase 575 V			200	250	300	250	350

Technical data

Type	Symbol	Unit	KNN210	KNN260	KNN315	KNN450	KNN550
Maximum operating frequency for motors according to UL and CSA		op. c./h	140	90	60	55	55
Electrical endurance for motors according to UL and CSA		op. c.		800.000		600.000	
Maximum operating frequency for general use according to UL and CSA		op. c./h	140	90	60	55	55
Electrical endurance for general use according to UL and CSA		op. c.		800.000		600.000	
Rated operational current for DC-1 (L/R ≤ 1 ms)							
1 pole... 24 V DC / 75 V DC / 125 V DC / 220 V DC / 300 V DC	I_e	A	250/200/160/-/-	315/225/180/-/-	350/315/200/-/-	450/450/315/-/-	550/550/400/-/-
2 poles in series ... 24 V DC / 75 V DC / 125 V DC / 220 V DC / 300 V DC			250/250/200/200/-	315/315/225/225/-	350/350/260/260/-	450/450/400/315/-	550/550/500/400/-
3 poles in series ... 24 V DC / 75 V DC / 125 V DC / 20 V DC / 300 V DC			250/250/250/250/200	315/315/315/315/225	350/350/350/350/260	450/450/450/400/315	550/550/550/500/400
Connection size							
Cables	S	mm^2		2×150		2×240	
Bars		mm	2x(25×5)	2x(30×5)	2x(30×6)	2x(40×5)	2x(50×5)
Tightening torque		Nm		35			50
ELECTRICAL DATA CONTROL CIRCUIT							
Range of control voltage for switch-on	U_c	%		85 - 110 (AC / DC)			
Range of control voltage for drop-out	U_c	%		20 - 75 (AC) / 10 - 60 (DC)			
Standard AC control voltages	U_c	V		24, 48, 110-120, 220-240, 380-415, 440-480, 600			
Standard DC control voltages	U_c	V		24, 48, 110, 220, 250			
Frequency of AC control voltage	f	Hz		50 / 60			
Control mode				Remote control with U_c			
AC coil consumption							
pick-up		VA / W		360		800 ... 950	
operation				5		9 ... 11(9 ... 11)	
DC coil consumption							
pick-up		W		360		750 ... 850	
operation				5		8 ... 10	
Operating time at AC rated voltage							
pick-up		ms		40 ... 60		50 ... 100	
drop-out				40 ... 60		150 ... 200 / 500 ... 1000	

Technical data

Type	Symbol	Unit	KNN700	KNN860
GENERAL				
Standards			IEC/EN60947-4-1, UL508	
Coil			AC / DC	
Width		mm	280	
Dimensions (H x W x D)		mm	307 × 280 × 291	361 × 280 × 291
MECHANICAL DATA				
Number of poles			3	
Degree of protection			IP00-IP20 (Front IP20 with optional shrouds)	
Ambient temperature				
open		°C	-25 ... +70	
close			-25 ... +70	
Storage temperature		°C	-40 ... +80	
Maximum operating frequency with no load		op.c./h	1200	
Mechanical endurance		op.c.		
Weight		kg	26.4	27.6
ELECTRICAL DATA POWER CIRCUIT				
Main pole resistance		mΩ	0.1	0.08
Rated short time current t. amb. = 40 °C				
1 s			7000	8000
4 s		A	7000	8000
10 s			5600	6900
15 s			5000	6000
Maximum back-up fuse for short-circuit protection				
gG coordination type 1 (U_e=440 V)			800	1000
gG coordination type 2 (U_e=440 V)	P_e	kW	-	-
aM coordination type 2 (use associated with an overload relay)			-	-
Rated insulation voltage	U_i	V	1000	
Razed impulse withstand voltage	U_{imp}	kV	8	
Rated operational voltage	U_e	V	690	
Rated frequency	f	Hz	50 / 60	
Thermal current	I_{th}	A	1000	1100
Rated operational current for				
AC-1 U_e=690V t.amb.=40°C		A	1000	1100
AC-3 U_e=440V t.amb.=55°C		A	700	860
Operational power for AC-1 three-phase 400 V	P_e	kW	692	762
Maximum operating frequency for AC-1		op. c./h	200	
Electrical endurance for AC-1		op. c.	6000	
Rated operational current for AC-3 (at 400 V)	I_e	A	700	860
Operational power for AC-3				
three-phase 230 V			225	280
three-phase 400 V			400	500
three-phase 440 V	P_e	kW	450	530
three-phase 500 V			500	600
three-phase 690 V			630	710
three-phase 1000 V			-	-
Maximum operating frequency for AC-3		op. c./h	55	55
Electrical endurance for AC-3		op. c.	600.000	
Rated operational current for AC-4 (at 400 V)	I_e	A	230	280
Operational power for AC-4 three-phase 400 V	P_e	kW	120	150
Electrical endurance for AC-4		op. c.	6.000	
Rated motor power according to standards UL and CSA				
single-phase 115 V			-	-
single-phase 230 V			-	-
three-phase 200 V	P_e	HP	200	250
three-phase 230 V			250	300
three-phase 460 V			500	600
three-phase 575 V			500	600

Technical data

Type	Symbol	Unit	KNN700	KNN860
Maximum operating frequency for motors according to UL and CSA		op. c./h	55	
Electrical endurance for motors according to UL and CSA		op. c.	600.000	
Maximum operating frequency for general use according to UL and CSA		op. c./h	55	
Electrical endurance for general use according to UL and CSA		op. c.	600.000	
Rated operational current for DC-1 (L/R ≤ 1 ms)				
1 pole... 24 V DC / 75 V DC / 125 V DC / 220 V DC / 300 V DC	I_e	A	700/700/500/-/-	860/860/630/-/-
2 poles in series ... 24 V DC / 75 V DC / 125 V DC / 220 V DC / 300 V DC			700/700/630/630/-	860/860/700/700/-
3 poles in series ... 24 V DC / 75 V DC / 125 V DC / 20 V DC / 300 V DC			700/700/700/700/630	860/860860/860/700
Connection size				
Cables	S	mm^2	2×240	
Bars		mm	2x(60×5)	2x(60×6)
Tightening torque		Nm	60	75
ELECTRICAL DATA CONTROL CIRCUIT				
Range of control voltage for switch-on	U_c	%	85 - 110 (AC / DC)	
Range of control voltage for drop-out	U_c	%	20 - 75 (AC) / 10 - 60 (DC)	
Standard AC control voltages	U_c	V	24, 48, 110-120, 220-240, 380-415, 440-480, 600	
Standard DC control voltages	U_c	V	24, 48, 110, 220, 250	
Frequency of AC control voltage	f	Hz	50 / 60	
Control mode			Remote control with U_c	
AC coil consumption				
pick-up		VA / W	1350 - 1600	
operation			21 - 25 / (21 - 25)	
DC coil consumption				
pick-up		W	1300 - 1550	
operation			18 - 22	
Operating time at AC rated voltage				
pick-up		ms	50 ... 100	
drop-out			150 ... 200 / 500 ... 1000	

KNN ordering codes

Type	Coil voltage (V)	No. of poles	Coil	Ordering No.
Contactors				
KNN80	24	3	AC	786.020.200
KNN80	48	3	AC	786.020.201
KNN80	60	3	AC	786.020.202
KNN80	110	3	AC	786.020.203
KNN80	220	3	AC	786.020.204
KNN80	240	3	AC	786.020.205
KNN80	380 / 400	3	AC	786.020.206
KNN80	400	3	AC	786.020.199
KNN80	415	3	AC	786.020.207
KNN95	24	3	AC	786.020.208
KNN95	48	3	AC	786.020.209
KNN95	60	3	AC	786.020.210
KNN95	110	3	AC	786.020.211
KNN95	220	3	AC	786.020.212
KNN95	240	3	AC	786.020.213
KNN95	380 / 400	3	AC	786.020.214
KNN95	415	3	AC	786.020.215
KNN95	440	3	AC	786.020.230
KNN110	24	3	AC / DC	786.020.216
KNN110	48	3	AC / DC	786.020.217
KNN110	60	3	AC / DC	786.020.218
KNN110	110	3	AC / DC	786.020.219
KNN110	220 - 240	3	AC / DC	786.020.220
KNN110	380 / 415	3	AC / DC	786.020.222
KNN110	440 / 480	3	AC / DC	786.020.245
KNN150	220 - 240	3	AC / DC	786.020.258
KNN150	380 / 415	3	AC / DC	786.020.259
KNN150	440 / 480	3	AC / DC	786.020.260
KNN175	220 - 240	3	AC / DC	786.020.273
KNN175	380 / 415	3	AC / DC	786.020.274
KNN210	220 - 240	3	AC / DC	786.020.349
KNN210	380 / 415	3	AC / DC	786.020.350
KNN260	220 - 240	3	AC / DC	786.020.288
KNN260	380 / 415	3	AC / DC	786.020.289
KNN315	220 - 240	3	AC / DC	786.020.351
KNN315	380 / 415	3	AC / DC	786.020.352
KNN450	220 - 240	3	AC / DC	786.020.303
KNN450	380 / 415	3	AC / DC	786.020.304
KNN550	220 - 240	3	AC / DC	786.020.316
KNN550	380 / 415	3	AC / DC	786.020.317
KNN700	220 - 240	3	AC / DC	786.020.328
KNN700	380 / 415	3	AC / DC	786.020.329
KNN860	220 - 240	3	AC / DC	
KNN860	380 / 415	3	AC / DC	

Dimensions
(mm)

KNN80, KNN95

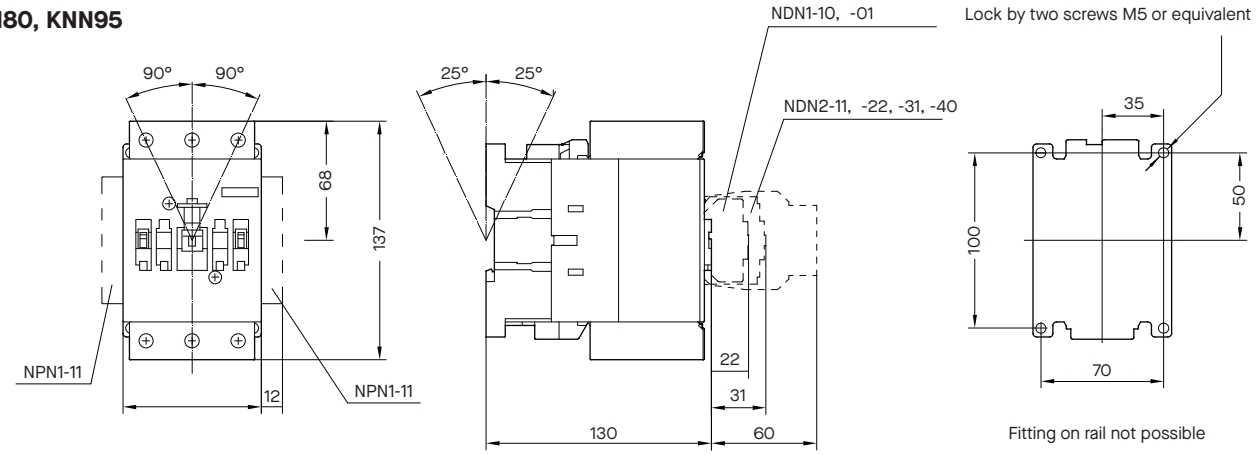

KNN110

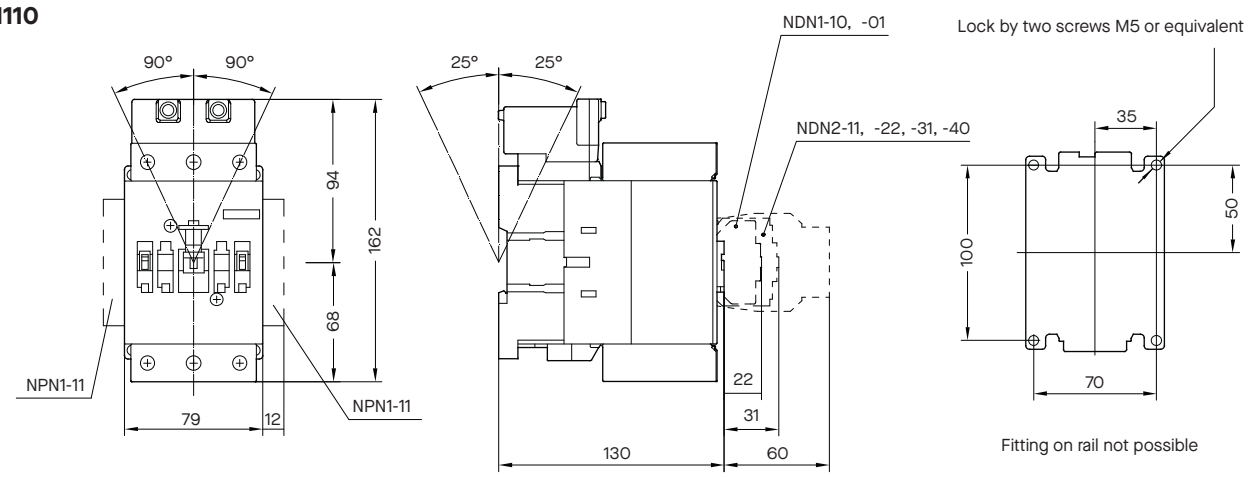

KNN150, KNN175

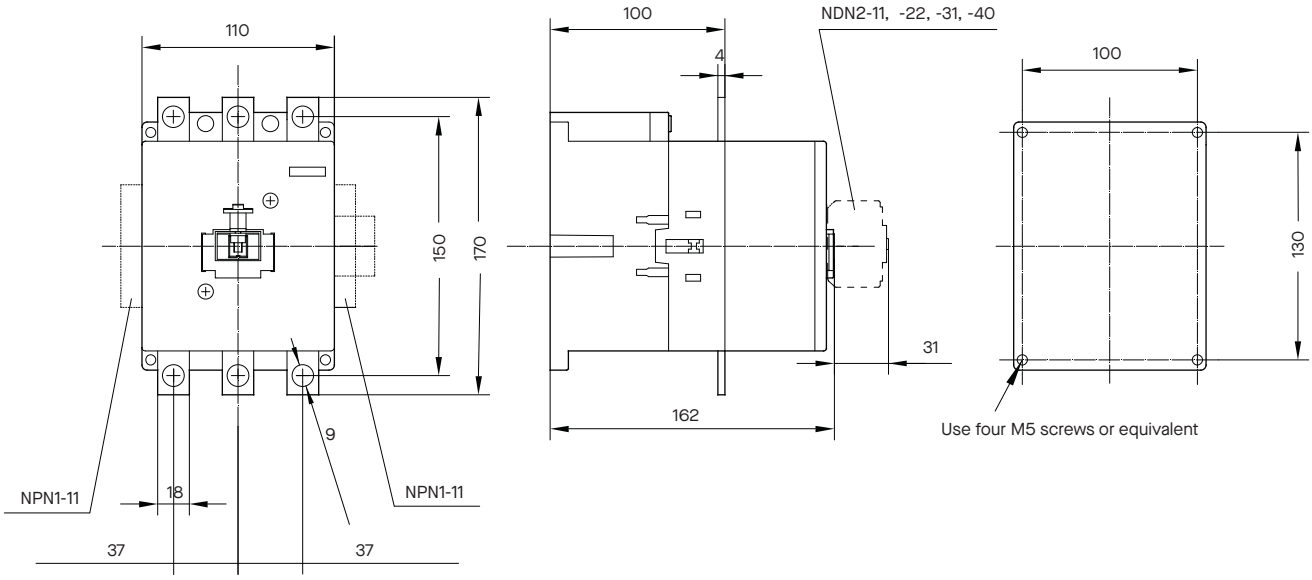

KNN210, KNN260, KNN315

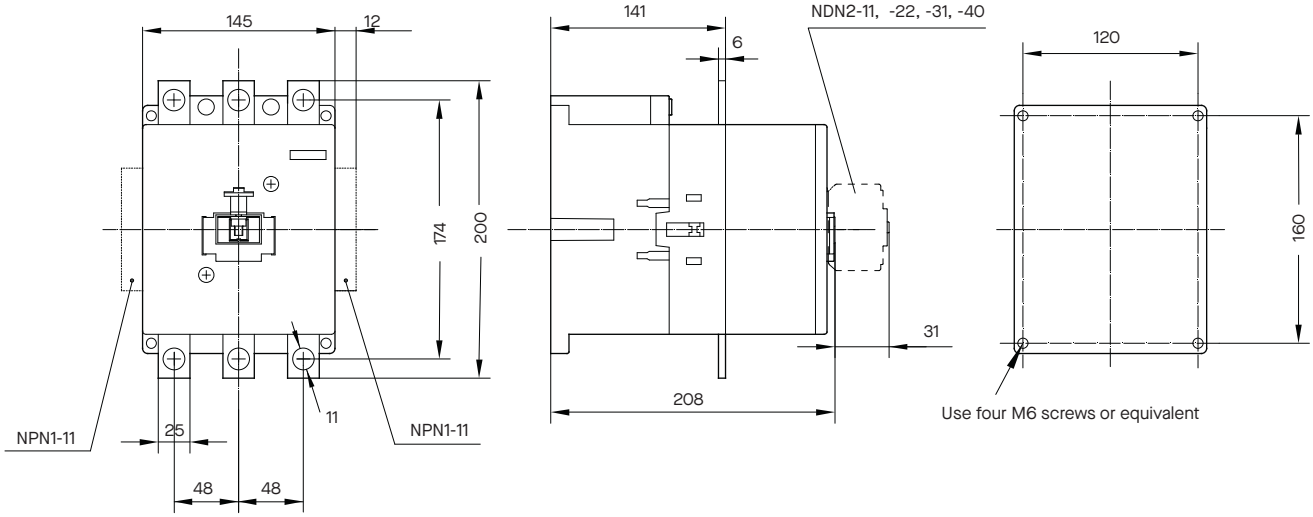

KNN450, KNN550

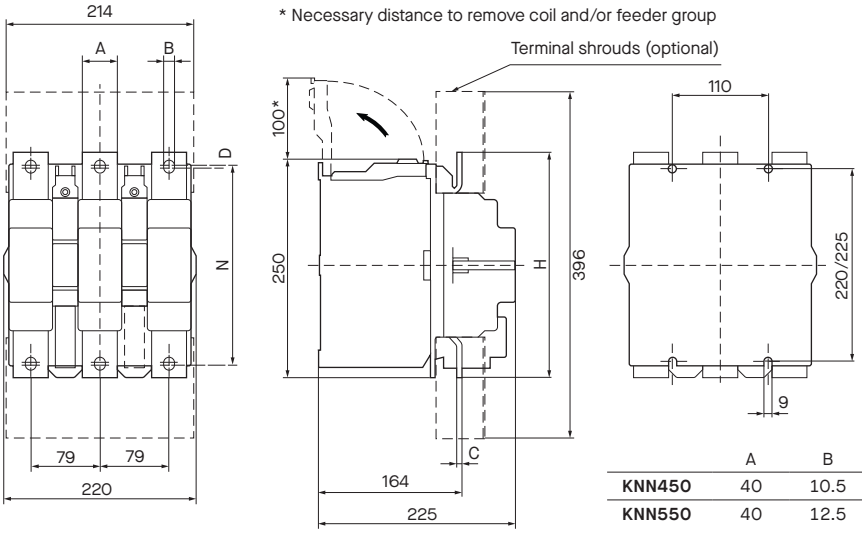

	A	B	C	D	N	H
KNN450	40	10.5	5	5	208	235
KNN550	40	12.5	6	3	228	258

KNN700, KNN860

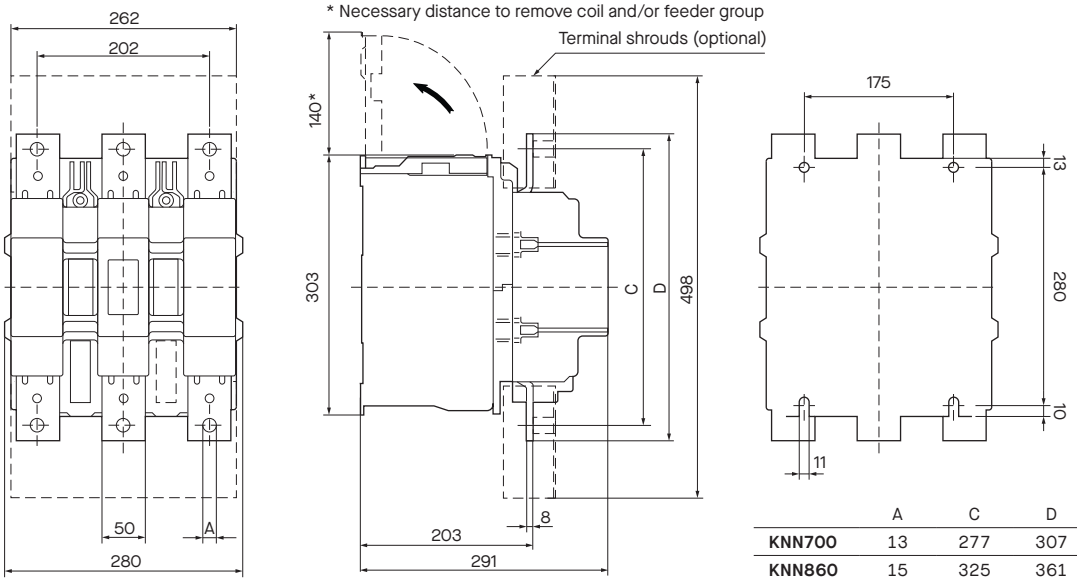

	A	C	D
KNN700	13	277	307
KNN860	15	325	361

Auxiliary switch

Technical data

Type	Symbol	Unit	NDN2-22	NDN2-31	NDN2-40	NPN1-11	NDN3-22
GENERAL							
Number of contacts							
Normally open / Normally closed			2NO / 2NC	3NO / 1NC	4NO / 0NC	1NO / 1NC	2NO / 2NC
For use with			KNN80 - KNN315				
Standards			IEC/EN60947-5-1				
Approvals			UL / CSA				CE
Protection degree			IP20				
Pollution degree			3				
Ambient temperature			IP00-IP20 (Front IP20 with optional shrouds)				
open		°C	-25 ... +55				
closed		°C	-25 ... +40				
Storage temperature		°C	-30 ... +80				
Maximum operating frequency with no load		oc. c./h.	3.000				
Mechanical endurance		op. c.	10.000.000				
Fixing			Front mounted			Side mounted	Mounted between the lower terminals
Cables size			1×1 ... 1,5 mm² / 2×1 ... 1,5 mm² / 2×1,5 ... 2,5 mm²				
Weight		kg	0.05				0.12
CHARACTERISTICS							
Rated insulation voltage	U_i	V	690				
Rated operational voltage	U_e	V	690				
Thermal current	I_{th}	A	10				16
Short time withstand current	I_{cw}		500 ms .... 60 A				
Back-up fuses			10 A gG				
Rated current AC-15							
120 V			6				
240 V			3				
400 V	I_e	A	2				
500 V			1.5				
690 V			1				
Rated current DC-13							
24 V				5		4	6
48 V				2		1.5	3
110 V	I_e	A		0.8		0.5	1
220 V				0.4		0.2	0.5